FITTING INSTRUCTIONS FOR

Standalone Rear Roof Shelf

SKU

KS0500

COMPATIBILITY

Toyota Fortuner AN150/160

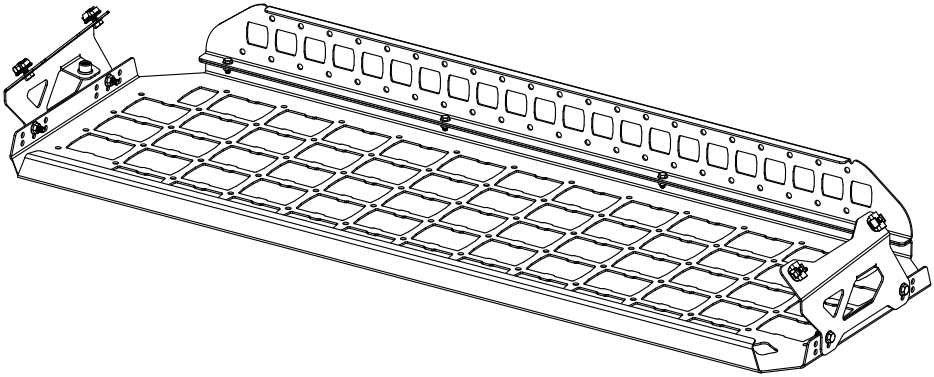

Included contents

QTY	COMPONENT	QTY	COMPONENT
1	Rear Roof Shelf	4	M6 Aluminium Nut Block
1	Rear Fence	4	M5 x 12 Flanged Hex Bolt G8.8
2	Handle Bracket	4	M5 Flanged Nut
2	Black TPU Nut Retainer Rectangle	8	M6 x 16 Flanged Hex Bolt G8.8
2	Black TPU Nut Retainer Notched	4	M6 Flanged Nut
1	M6 x 50 Hex Bolt (Installation Tool)		

Time 30 minutes / Half a beer

Scan the **QR code** to watch the video installation guide,
or for further information contact KAON on **07 3180 1470** or **info@kaon.com.au**

Installing with a KAON Light Cargo Barrier

With an Existing Barrier Installed

Before installing the shelf, prepare as follows:

1. Undo the thumb screws that attach to the rear grab handles.
2. Leave the Cargo Barrier installed to the head rests with the barrier brackets attached.
3. Follow the shelf installation instructions in this guide, before completing the below.





After the Standalone Shelf Installation

The Standalone Shelf includes an M10 nutsert as a mounting point for our Light Cargo Barriers. This replaces the grab handle clamp provided with the barrier.

To install the Light Cargo Barrier with this Standalone Shelf:

1. Thread the barrier bracket through the opening alongside the Standalone Shelf, as pictured.
2. Secure to the Standalone Shelf handle bracket nutsert using the original knob. There are a couple of positions for adjustment depending to cater for different seat positions.
3. That's it! You're ready to go.







Let's get to work.

Preparing the Shelf

1. Attach the rear fence to the shelf using M5 nuts and bolts.



Preparing the Top Roof Mounts

1. Remove the rear grab handles by prying off the plastic cover and removing metal clips.
2. Create 2mm of clearance around the rectangular clip opening by positioning or if required, slightly trimming the roof lining.





M6 Roof Nut Install

IMPORTANT: Please read and understand the steps required to install and retain the M6 nut blocks in the roof. Refer to our Fitting Guide video (find the QR code on the cover) for more details.

1. The supplied M6 x 50 hex bolt is used to install the nut block and retainer in the roof cavity.
2. In the Fortuner there are two different retainers per side: a rectangular and a notched version. Each corresponds to the shape of the roof mounts.
3. Place the retainer and nut block on the hex bolt as pictured. The retainer will clip over the nut block to hold it in the roof cavity.
4. Ensuring you have the correct corresponding retainer shape, insert the nut block into the opening in the roof. Rotate the block 90 degrees so that the raised spigot on the nut block locates in the rectangular opening.







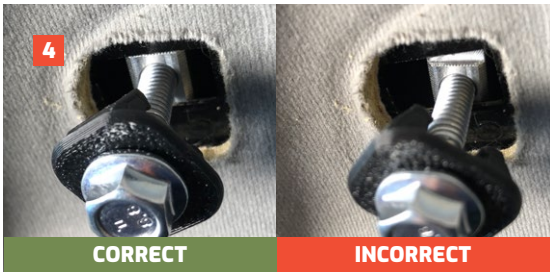

M6 Roof Nut Install cont.

5. While pulling back on the bolt, insert one leg of the retainer and push to clip in place.
6. Push the other leg up into the cavity and ensure that retainer is securely held in the roof and that the aluminum nut is held in place properly. Pull on the hex bolt to confirm that the aluminum nut is position properly and held securely.
7. Pick out any roof lining caught under the retainer.
8. Unwind and remove the bolt.
9. Repeat on the other side.

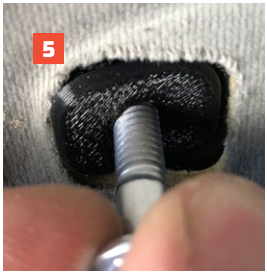







Shelf Installation

1. The Handle Brackets for the Fortuner come in left and right sides. The nutsert should be positioned forwards in the bracket on each side, as pictured.
2. Place the handle brackets and carefully attach using the provided M6 flanged bolts. Take care not to apply too much pressure against the nut blocks we installed earlier.
3. Tighten the bolts and repeat on the other side.
4. Position the shelf and attach to the handle brackets using M6 flanged bolts and nuts. There are a couple of positions for adjustment in your shelf positioning. Whilst this can be done on your own, you may find it easier to ask a mate for help.
5. With the shelf position confirmed, tighten all the bolts.
6. That's it! Your new shelf is able to hold a recommended maximum load of 10kg.





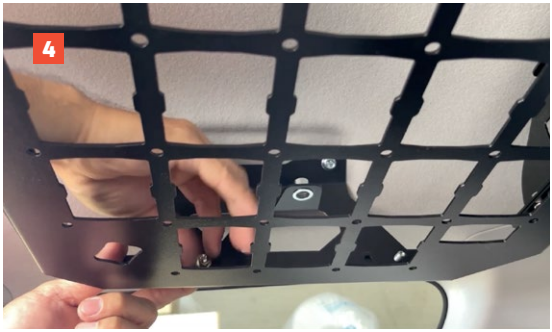



NOTICE

We cannot confirm compatible fitment of this shelf with child restraints, due to the number of possible variations. Whilst it may work with your configuration, we recommend the use of a seat belt protector where any contact occurs between any seat belt or restraint and the shelf.

G8.8 Bolt Torque (Non-Lubricated)					
DIAMETER (mm)	5mm	6mm	8mm	10mm	12mm
NEWTON-METRES (Nm)	6 Nm	10 Nm	15 Nm	22 Nm	35 Nm



Local Knowledge & Assistance

We know half the fun of building your dream 4x4 is getting your hands dirty. But we also know that sometimes, things don't go to plan. If in the pursuit to build the ultimate setup you find yourself off-track, we're here to help you get unstuck.

For further information call 07 3180 1470 or email info@kaon.com.au

Disclaimer: The products sold by KAON should not be modified, and are for use only on the vehicles specifically stated. KAON will not be liable for any damages arising out of the use or misuse of it's products. It is the customers responsibility to ensure the products are safely and properly used and installed. KAON consistently seeks to improve it's products and reserves the right to make changes to any product.